SUBMERSIBLE WATER PUMPS

■ STOCK No. 35463. 35464. 52064. 64275.

■ PART No. SWP120. SWP120A. SWP120A/110. SWP120ASS.

SPARE PARTS LISTING & ASSEMBLY DRAWING 03/2002

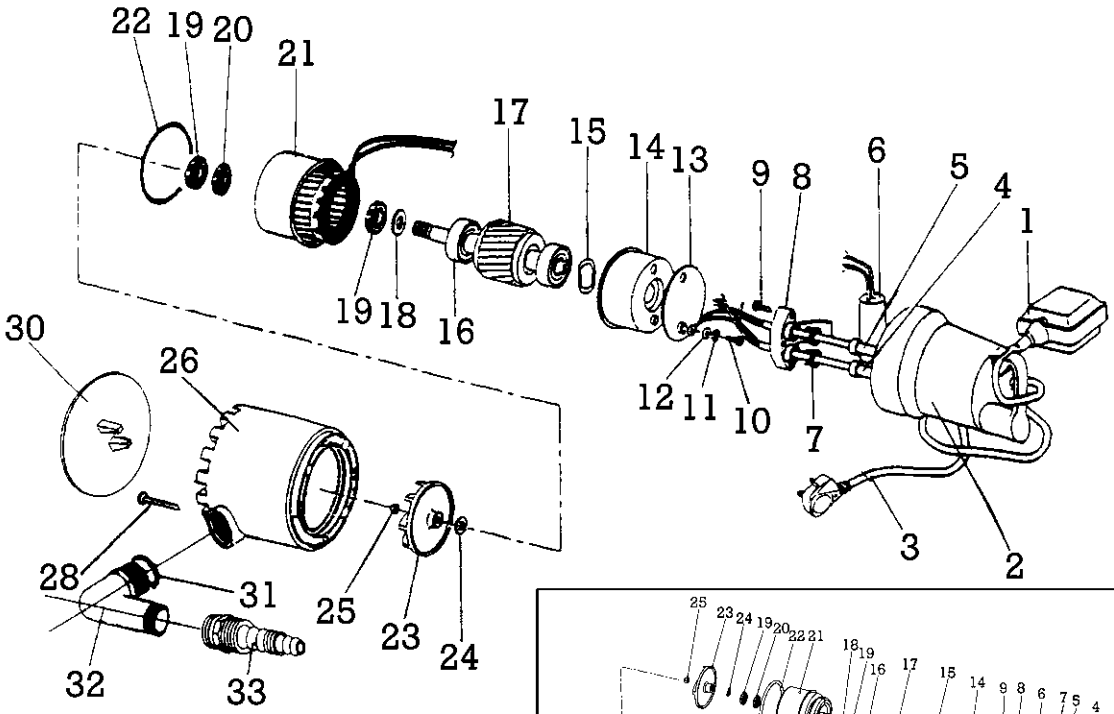

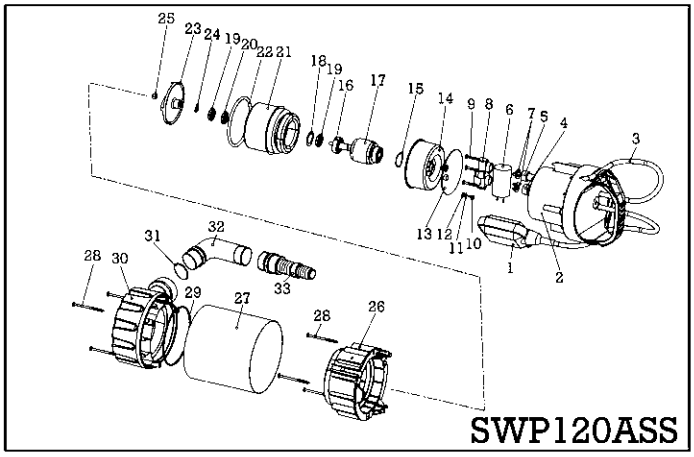

KEY No.	PART No.	STOCK No.	DESCRIPTION
1	YSWP - P1380033	65628	Float switch (SWP120ASS)
1	YSWP - P1380007	36590	Float switch
2	YSWP - S3600280	65629	Cap (SWP120ASS)
2	YSWP - S3600192	54855	Cap
2	YSWP - S3600193	54864	Cap (SWP120)
3	YSWP - P1320016	65630	230V Power Cable
3	YSWP - P1330009	53217	110V Power cable
4	YSWP - P1230003	36595	Grommet
5	YSWP - P1230002	65631	Grommet
6	YSWP - P1260029	36596	Capacitor 230V
6	YSWP - P1260014	53218	Capacitor 110V
7	YSWP - S3500336	54490	Anti-tear ring
8	YSWP - S3500335	54491	Cable clamp
9	YSWP - P1100008	36600	Screw
10	YSWP - P1100003	36603	Earth screw
11	YSNP - P1120003	36604	Spring washer
12	YSWP - P1120004	36605	Washer
13	YSWP - S3500106	36607	Insulation disk
14	YSWP - S3120005	36608	Upper flange
15	YSWP - P1120002	36609	Waved ring
16	YSWP - P1180001	36611	Ball bearing
17	YSWP - S3101008	54865	Rotor shaft assembly 230V
17	YSWP - S3101009	57406	Rotor shaft assembly 110V

KEY No.	PART No.	STOCK No.	DESCRIPTION
18	YSWP - P1120007	36612	Washer
19	YSWP -P1210001	36614	Seal
20	YSWP - P1210004	54494	Twin lip seal
21	YSWP - S3410056	65635	Field coil 230V
21	YSWP - 53410046	53220	Field coil 110V
22	YSWP - P1200007	36616	'O' ring
23	YSWP - S3500528	65636	Impeller
24	YSWP - P1120006	36617	Washer
25	YSWP - P1110005	36619	Nut
26	YSWP - S3500680	65637	Pump housing (SWP120ASS)
26	YSWP - S3500039	36625	Pump housing
26	YSWP - S3500059	53223	Pump housing (SWP120A/110)
27	YSWP - P1600026	65639	Stainless Steel housing
28	YSWP - P1100017	65633	Screw
29	YSWP - P1200095	65632	'O' ring
30	YSWP - S3500684	65634	Filter base (SWP120ASS)
30	YSWP - S3600062	36626	Filter base
31	YSWP - P1200009	36620	'O' Ring
32	YSWP - P3600111	54493	Elbow 1¼" x 1¼"
33	YSWP - S3600107	51381	Hose adaptor

DRAPER TOOLS LTD, HURSLEY ROAD, CHANDLER'S FORD, EASTLEIGH, HANTS. SO53 1YF. U.K. www.draper.co.uk e-mail: sales@draper.co.uk