INSTRUCTIONS FOR

Deep Water Submersible Pump with Float Switch

Stock Nos. 78779 78780 **Part Nos. DSWP750 DSWP1000**

IMPORTANT: PLEASE READ THESE INSTRUCTIONS CAREFULLY TO ENSURE THE SAFE AND EFFECTIVE USE OF THIS PRODUCT.

GENERAL INFORMATION

These instructions accompanying the product are the original instructions. This document is part of the product, keep it for the life of the product passing it on to any subsequent holder of the product. Read all these instructions before assembling, operating or maintaining this product.

This manual has been compiled by Draper Tools describing the purpose for which the product has been designed, and contains all the necessary information to ensure its correct and safe use. By following all the general safety instructions contained in this manual, it will ensure both product and operator safety, together with longer life of the product itself.

All photographs and drawings in this manual are supplied by Draper Tools to help illustrate the operation of the product.

Whilst every effort has been made to ensure the accuracy of information contained in this manual, the Draper Tools policy of continuous improvement determines the right to make modifications without prior warning.

1. TITLE PAGE

1.1 INTRODUCTION:

USER MANUAL FOR:

DEEP WATER SUBMERSIBLE PUMP WITH FLOAT SWITCH

Stock nos. 78779, 78780
Part nos. DSWP750, DSWP1000

1.2 REVISIONS:

Date first published December 2014

As our user manuals are continually updated, users should make sure that they use the very latest version.

Downloads are available from: http://www.drapertools.com/b2c/b2cmanuals.pgm

DRAPER TOOLS LIMITED
HURSLEY ROAD
CHANDLER'S FORD
EASTLEIGH
HAMPSHIRE
SO53 1YFUK

WEBSITE: www.drapertools.com
PRODUCT HELPLINE: +44 (0) 23 8049 4344
GENERAL FAX: +44 (0) 23 8026 0784

1.3 UNDERSTANDING THIS MANUALS SAFETY CONTENT:

WARNING! Information that draws attention to the risk of injury or death.

CAUTION! Information that draws attention to the risk of damage to the product or surroundings.

1.4 COPYRIGHT © NOTICE:

Copyright © Draper Tools Limited.

Permission is granted to reproduce this publication for personal & educational use only. Commercial copying, redistribution, hiring or lending is prohibited.

No part of this publication may be stored in a retrieval system or transmitted in any other form or means without written permission from Draper Tools Limited.

In all cases this copyright notice must remain intact.

2. CONTENTS

2.1 CONTENTS

PAGE CONTENT ***PAGE***

1 TITLE PAGE
- 1.1 INTRODUCTION 2
- 1.2 REVISION HISTORY 2
- 1.3 UNDERSTANDING THIS MANUAL 2
- 1.4 COPYRIGHT NOTICE 2

2 CONTENTS
- 2.1 CONTENTS 3

3 GUARANTEE
- 3.1 GUARANTEE 4

4 INTRODUCTION
- 4.1 SCOPE 5
- 4.2 SPECIFICATION 5
- 4.3 HANDLING & STORAGE 5

5 HEALTH & SAFETY INFORMATION
- 5.1 GENERAL SAFETY INSTRUCTIONS 6-7
- 5.2 ADDITIONAL SAFETY INSTRUCTIONS FOR SUBMERSIBLE WATER PUMPS 8
- 5.4 CONNECTION TO THE POWER SUPPLY 9A

6 TECHNICAL DESCRIPTION
- 6.1 IDENTIFICATION 10B
- 6.2 MAIN COMPONENT DESCRIPTIONS 10A

7 UNPACKING & CHECKING
- 7.1 PACKAGING 11
- 7.2 WHAT'S IN THE BOX 11

8 READYING THE PUMP
- 8.1 INSTALLATION OF PARTS 12

9 INSTALLING THE PUMP
- 9.1 PREPARATION AND INSTALLATION 13
- 9.2 PLACEMENT 13-14

10 OPERATING THE PUMP
- 10.1 FLOATING SWITCH 15-16

11 MAINTENANCE
- 12.1 CLEARING OBSTRUCTIONS FROM IN THE IMPELLER HOUSING 17

12 OPTIONAL ACCESSORIES 18

13 TROUBLESHOOTING
- 13.1 TROUBLESHOOTING CHECKLIST 18

14 DISPOSAL
- 14.1 DISPOSAL 19

15 EXPLANATION OF SYMBOLS
- 15.1 EXPLANATION OF SYMBOLS 19

DECLARATION OF CONFORMITY ..... ENCLOSED

3. GUARANTEE

3.1 GUARANTEE

Draper tools have been carefully tested and inspected before shipment and are guaranteed to be free from defective materials and workmanship.
Should the tool develop a fault, please return the complete tool to your nearest distributor or contact Draper Tools Limited, Chandler's Ford, Eastleigh, Hampshire, SO53 1YF. England.
Telephone Sales Desk: (023) 8049 4333 or Product Helpline (023) 8049 4344.
A proof of purchase must be provided with the tool.
If upon inspection it is found that the fault occurring is due to defective materials or workmanship, repairs will be carried out free of charge. This guarantee period covering parts/labour is 12 months from the date of purchase except where tools are hired out when the guarantee period is ninety days from the date of purchase. This guarantee does not apply to normal wear and tear, nor does it cover any damage caused by misuse, careless or unsafe handling, alterations, accidents, or repairs attempted or made by any personnel other than the authorised Draper warranty repair agent.
Note: If the tool is found not to be within the terms of warranty, repairs and carriage charges will be quoted and made accordingly.
This guarantee applies in lieu of any other guarantee expressed or implied and variations of its terms are not authorised.
Your Draper guarantee is not effective unless you can produce upon request a dated receipt or invoice to verify your proof of purchase within the guarantee period.
Please note that this guarantee is an additional benefit and does not affect your statutory rights.
Draper Tools Limited.

4. INTRODUCTION

4.1 SCOPE

This machine was designed for pumping deep clear water but can pass solids of up to 5mm. It is ideally suited to pumping out pools and garden ponds where the water is free of debris.

4.2 SPECIFICATION

Stock No.	78779	78780
Part No.	DSWP750	DSWP1000
Motor:		
Rated voltage	230V	230V
Rated frequency	50Hz	50Hz
Rated input	750W	1000W
Output aperture size	32mm	32mm
Max. flow rate	95L/min	95L/min
Max. head height	24M	36M
Max. water temperature	35°C	35°C
Max. Particle Size	5mm	5mm
Degree of protection against moisture	IPX8	IPX8

Warning: This product must be used in conjunction with a residual current device (RCD)

4.3 HANDLING & STORAGE

This submersible pump is designed to be moved to different locations. Ensure it is always operated on a level surface.

5. HEALTH & SAFETY INFORMATION

5.1 GENERAL SAFETY INSTRUCTIONS

General Power Tools Safety Warnings

⚠ **WARNING:** Read all instructions. Failure to follow all instructions listed below may result in electric shock, fire and/or serious injury.

Save all warnings and instructions for future reference.

The term "power tool" in the warnings refers to your mains operated (corded) power tool or battery operated (cordless) power tool.

1) Work area safety

a) **Keep work area clean and well lit.** Cluttered or dark areas invite accidents.

b) **Do not operate power tools in explosive atmospheres, such as in the presence of flammable liquids, gases or dust. Power tools create sparks which may ignite the dust or fumes.**

c) **Keep children and bystanders away while operating a power tool.** Distractions can cause you to lose control.

2) Electrical Safety

a) **Power tool plugs must match the outlet.** Never modify the plug in any way. Do not use any adapter plugs with earthed (grounded) power tools. Unmodified plugs and matching outlets will reduce risk of electrical shock.

b) **Avoid body contact with earthed or grounded surfaces such as pipes, radiators, ranges and refrigerators.** There is an increased risk of electric shock if your body is earthed or grounded.

c) **Do not expose power tools to rain or wet conditions.** Water entering a power tool will increase the risk of electric shock.

d) **Do not abuse the cord. Never use the cord for carrying, pulling or unplugging the power tool.** Keep cord away from heat, oil, sharp edges or moving parts. Damaged or entangled cords increase the risk of electric shock.

e) **When operating a power tool outdoors, use an extension cord suitable for outdoor use.** Use of a cord suitable for outdoor use reduces the risk of electric shock.

f) **If operating a power tool in a damp location is unavoidable, use a residual current device (RCD) protected supply.** Use of an RCD reduces the risk of electric shock.

3) Personal Safety

a) **Stay alert, watch what you are doing and use common sense when operating a power tool. Do not use a power tool while you are tired or under the influence of drugs, alcohol or medication.** A moment of inattention while operating power tools may result in serious personal injury.

b) **Use personal protective equipment. Always wear eye protection.** Protective equipment such as dust mask, non-skid safety shoes, hard hat, or hearing protection used for appropriate conditions will reduce personal injuries.

c) **Prevent unintentional starting. Ensure the switch is in the off position before connecting to power source and/or battery pack, picking up or carrying the tool.** Carrying power tools with your finger on the switch or energising power tools that have the switch on invites accidents.

d) **Remove any adjusting key or wrench before turning the power tool on.** A wrench or a key left attached to a rotating part of the power tool may result in personal injury.

e) **Do not overreach. Keep proper footing and balance at all times.** This enables better control of the power tool in unexpected situations.

f) **Dress properly. Do not wear loose clothing or jewellery. Keep your hair, clothing and gloves away from moving parts.** Loose clothes, jewellery or long hair can be caught in moving parts.

g) **If devices are provided for the connection of dust extraction and collection facilities, ensure these are connected and properly used.** Use of dust collection can reduce dust related hazards.

4) Power Tool Use And Care

a) **Do not force the power tool. Use the correct power tool for your application.** The correct power tool will do the job better and safer at the rate for which it was designed.

b) **Do not use the power tool if the switch does not turn it on and off.** Any power tool that cannot be controlled with the switch is dangerous and must be repaired.

c) **Disconnect the plug from the power source and/or the battery pack from the power tool before making any adjustments, changing accessories, or storing power tools.** Such preventive safety measures reduce the risk of starting the power tool accidentally.

d) **Store idle power tools out of the reach of children and do not allow persons unfamiliar with the power tool or these instructions to operate the power tool.** Power tools are dangerous in the hands of untrained users.

e) **Maintain power tools. Check for misalignment or binding of moving parts, breakage of parts and any other condition that may affect the power tools operation. If damaged, have the power tool repaired before use.** Many accidents are caused by poorly maintained power tools.

f) **Keep cutting tools sharp and clean.** Properly maintained cutting tools with sharp cutting edges are less likely to bind and are easier to control.

g) **Use the power tool, accessories and tool bits etc., in accordance with these instructions, taking into account the working conditions and the work to be performed.** Use of the power tool for operations different from intended could result in a hazardous situation.

5) Battery tool use and care

a. **Recharge only with the charger specified by the manufacturer.** A charger that is suitable for one type of battery pack may create a risk of fire when used with another battery pack.

b. **Use power tools only with specifically designated battery packs.** Use of any other battery packs may create a risk of injury and fire.

c. **When battery pack is not in use, keep it away from other metal objects, like paper clips, coins, keys, nails, screws or other small metal objects, that can make a connection from one terminal to another.** Shorting the battery terminals together may cause burns or a fire.

d. **Under abusive conditions, liquid may be ejected from the battery; avoid contact.** If contact accidentally occurs, flush with water. If liquid contacts eyes, additionally seek medical help. Liquid ejected from the battery may cause irritation or burns.

6) Service

a. **Have your power tool serviced by a qualified repair person using only identical replacement parts.** This will ensure that the safety of the power tool is maintained.

5.2 ADDITIONAL SAFETY INSTRUCTIONS FOR SUBMERSIBLE WATER PUMPS

- When carrying or lifting the submersible pump always use the transport handle, DO NOT carry or lift using the power cable or float switch cable.
- Before connecting to the power supply:
  - A residual current circuit breaker (RCD) must be used for all applications (Draper Stock No.69307 or 89301).
  - The electrical supply should be the same as that stated on the rating plate.
- Submersible water pumps should always be transported, stored, and submersed vertically.
- **Always** ensure that your hands are dry when connecting and disconnecting the power supply.
- **Never** operate the pump below the top of the water inlet.
- The area being pumped should be kept clear, and nobody should enter the area while pump is operating.
- Do not pump explosive or flammable liquids.

Important: please read before use.

The following additional instructions must be followed at all times. Failure to do so could invalidate the guarantee of this submersible water pump.

- The float switch must be clamped in position using the cable clamp recess.

NOTE: The pump, should be suspended using a rope, chain or stood on a brick to prevent any gravel etc. being sucked into the pump and damaging the impeller.

- If the pump fails to operate, disconnect from mains supply. Remove the base (see page 9) and gently turn the impeller using a screwdriver. Check for obstruction in the impeller, i.e. stones/gravel etc.
- The float switch fitted to the pump is **NOT** suitable for continuous use as an ON/OFF switch.
- If the power cable becomes damaged it must be changed by the manufacturer or it's service agents.

IMPORTANT: Any pump returned to Draper Tools Limited under warranty must be clean. If a pump is received that has **NOT** been cleaned, it will be returned to you at your cost.
Make sure the power supply information on the machine's rating plate are compatible with the power supply you intend to connect it to.

THE FOLLOWING ADDITIONAL INSTRUCTIONS MUST BE FOLLOWED AT ALL TIMES. FAILURE TO DO SO COULD INVALIDATE THE GUARANTEE OF THIS SUBMERSIBLE WATER PUMP.

1. The float switch must be clamped in position using cable clamp recess (see page 9, fig.10).
2. Clean water pumps are not suitable for use in dirty water.
3. These water pumps are designed for pumping water only.
   The addition of any chemicals, chlorine or additives to the water could damage the pump, this would be considered misuse and would not be covered under warranty.
4. When using clean water pumps in a pond or where there is gravel, mud, leaves, etc.
   NOTE: The pump, should be suspended using a rope or chain or stood on a brick to prevent any gravel, etc., being sucked into the pump.
5. If the pump fails to operate, disconnect from mains supply. Remove output elbow and turn the impeller using a screwdriver or finger. Check for obstruction in the impeller, i.e. stones/gravel, etc.
6. The float switch fitted to this pump is not suitable for continuous use as an on/off switch.

IMPORTANT: ANY PUMP RETURNED TO DRAPER TOOLS UNDER WARRANTY MUST BE CLEAN. IF A PUMP IS RECEIVED THAT IS NOT, OR HAS NOT BEEN CLEANED, IT WILL BE RETURNED TO YOU AT YOUR COST.

5.3 CONNECTION TO THE POWER SUPPLY

This machine comes supplied with a UK standard 3 pin plug fitted. It is designed for connection to a domestic power supply rated at 230V AC.
Because it is constructed mostly of metal parts, it is a Class 1 machine; meaning, it must have an earth connection in the power supply. This is to prevent electrocution in the event of a failure.

Apart from replacing the fuse in the plug, no other electrical work is recommended on this produce.

- Blank page -

6. TECHNICAL DESCRIPTION

6.1 IDENTIFICATION

1. Automatic cut off float switch
2. Transport handle
3. Outlet
4. Moulded plug & cable
5. Filter Inlet

6.2 MAIN COMPONENT DESCRIPTIONS

The **CARRY HANDLE** for ease of transportation.

The **STEPPED HOSE ADAPTOR** allows the use of 25 and 32mm hoses.

The **WATER OUTLET;** Pumped water is expelled from this aperture.

The **PLUG** connects the machine to your power supply.

The **FLOAT SWITCH** will switch the pump on/off automatically at set water levels (user adjustable).

The **MAIN PUMP BODY** houses the pumps motor, it should be submerged in use to help cool the motor.

The **INLET/IMPELLER HOUSING;** This is where the water to be pumped enters the machine. The impeller is mounted in the top section of the housing.

7. UNPACKING & CHECKING

7.1 PACKAGING

Carefully remove the pump from the packaging and examine it for any sign of damage that may have happened during shipping. Lay the contents out and check them against the parts shown below. If any part is damaged or missing; please contact the Draper Helpline (the telephone number appears on the Title page) and do not attempt to use the pump.

The packaging material should be retained at least during the guarantee period: in case the machine needs to be returned for repair.

Warning! Some of the packaging materials used may be harmful to children. Do not leave any of these materials in the reach of children.

If any of the packaging is to be thrown away, make sure they are disposed of correctly; according to local regulations.

7.2 WHAT´S IN THE BOX?

As well as the pump; there may be several parts not fitted or attached to it.

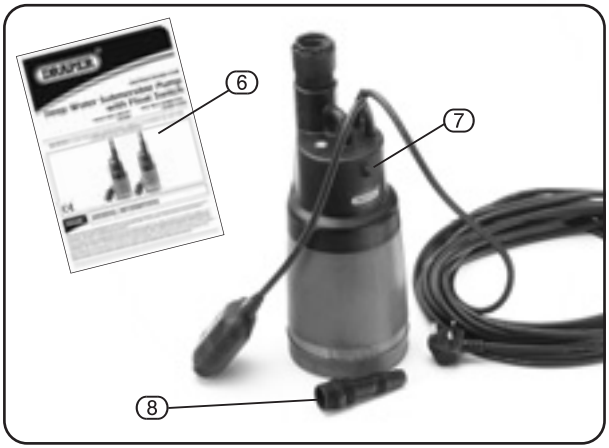

⑥ Instruction booklet
⑦ Submersible water pump
⑧ Hose adaptor

8. READYING THE PUMP

8.1 INSTALLATION OF PARTS

Before first use it is important to carry out a visual check of the product to ensure that the product has not suffered any transit damage and is safe to use.

To connect the hose adaptor, simply screw it into its threaded housing.

To adjust the stepped hose adaptor for your chosen size of lay flat hose, check the internal dimensions of your lay flat hose and select either the 25 or 32mm section of the stepped adaptor to connect your hose to.

Your chosen hose should be secured with a suitable retaining clip. The float switch should be allowed to move freely without any restrictions. The float switch can be set to turn the pump on/off at differing water levels, this will be covered in the following section of this manual.

9. INSTALLING THE PUMP

9.1 PREPARATION AND INSTALLATION

⚠ **WARNING:** DO NOT MAKE ANY OF THE FOLLOWING ADJUSTMENTS WITH THE PUMP CONNECTED TO THE POWER SUPPLY.

CAUTION: This submersible dirty water pump is capable of passing solids of up to a maximum of 35mm. If a smaller diameter output hose/hose adaptor is used, then this will reduce the size of solids that this pump can pass. For this reason we recommend the use of the largest 38mm hose/hose adaptor option.

9.2 PLACEMENT - FIGS. 1 - 5

The pump inlet must be fully submersed before the power is switched on. DO NOT turn on when dry.

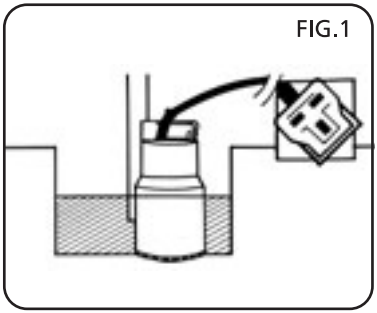

When submersing or lifting the pump it will be necessary to use a rope or chain (not supplied), this must be attached to the transport handle.

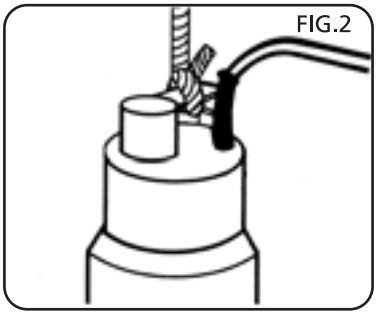

If pumping water from a sandy or muddy floor bed, the pump can be suspended using a rope or chain (not supplied) fixed to the handle.

DO NOT use any of the electrical cables for this purpose.

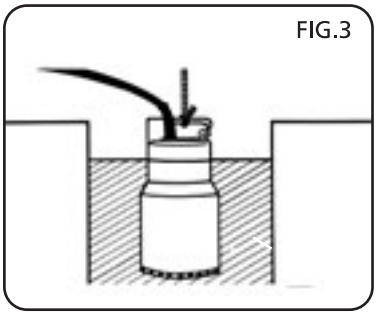

9. INSTALLING THE PUMP

When pumping flood water from a room or cellar, installation of the pump should be in a drain well (if possible).

The dimensions should allow easy movement of the float switch.

This will allow the pump to remove the water down to below the floor level.

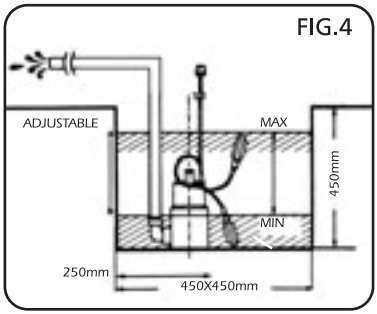

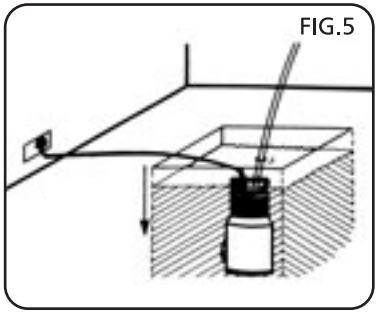

10. OPERATING THE PUMP

10.1 FLOATING SWITCH - FIGS. 6 - 10

An automatic float switch (5) is fitted to the pump. This enables the pump to switch off automatically when the water has reached the minimum level.

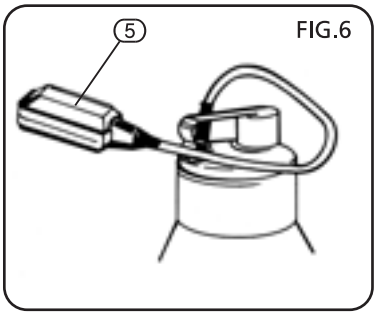

FIG.6

As the water level drops the float switch will fall with the water level.

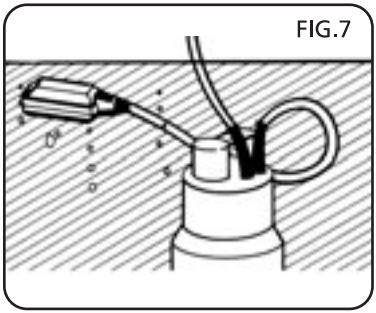
FIG.7

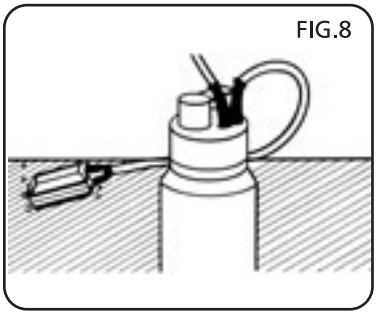
FIG.8

When the float switch reaches the minimum level it will automatically switch the pump off.

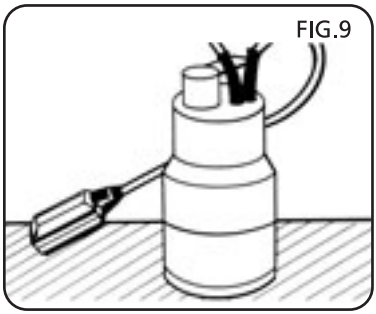
FIG.9

10. OPERATING THE PUMP

The float switch can be set to a specific cut off level by increasing or decreasing the length of cable (B) between the cable clamp recess (C) and float switch (5).

FIG.10

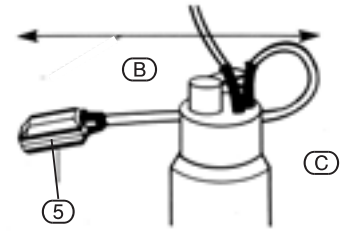

11. MAINTENANCE

WARNING: For your own safety, remove plug from power supply before maintaining your deep water submersible pump.

11.1 CLEARING OBSTRUCTIONS IN THE IMPELLER HOUSING – FIGS. 11 - 12

If the impeller becomes blocked or obstructed, remove base plate (5.1) inlet gauze (5.2) and cover plate (5.3).

With a screwdriver hold the spindle (5.4) while removing nut (5.5) with a suitable spanner.

With the nut removed, the upper and lower sections of the impeller can be removed for cleaning.

DO NOT lever the impeller out as this will cause damage due to its brittle construction.

Take note of the orientation and order with which the components were removed to ensure the correct re-assembly.

Rinse the contents with clean water to flush.

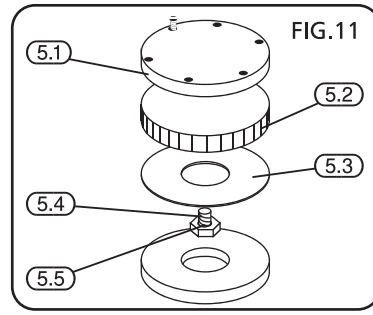

FIG.11

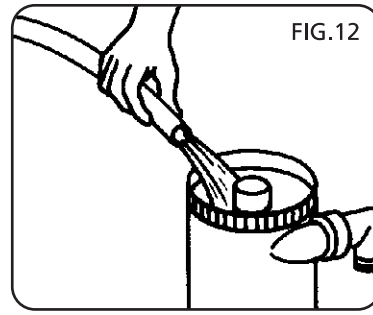
FIG.12

12. OPTIONAL ACCESSORIES

Layflat Hoses:

Stock No.	Part No.	size	Length	Description
36919	ASWP1	25mm. I.D.	5m.	Hobby/DIY Hose
36946	ASWP3	25mm. I.D.	10m.	Heavy Duty Hose
36947	ASWP4	32mm. I.D.	10m.	Heavy Duty Hose

13. TROUBLESHOOTING

13.1 TROUBLESHOOTING CHECKLIST

FAULT	POSSIBLE CAUSE	REMEDY
No power	1. Faulty power supply. 2. Power supply fuse blown. 3. Residual current circuit breaker tripped.	1. This should be replaced immediately by a qualified person. 2. Replace the fuse. 3. Check and reset.
Pump running, but not delivering water.	1. Water level under the minimum pumping level. 2. Filter inlet clogged. 3. Outlet tube clogged. 4. Hose flat.	1. Raise the water level (where possible). 2. Clean inlet. 3. Remove tube and clear obstruction. 4. Re-install the pump, but at an angle, when submerged, gently shake while outlet tube is open. Switch on/off repeatedly.
Pump stops running due to thermal overload coming into operation.	1. Voltage supply different to rating plate. 2. A solid has jammed in pump. 3. The pump is operating in hot water. 4. The pump ran dry.	1. Remove plug from power supply. 2. Remove obstruction. 3. Allow pump to cool then restart. 4. Wait for pump to cool then float switch.

14. DISPOSAL

14.1 DISPOSAL

- At the end of the machine's working life, or when it can no longer be repaired, ensure that it is disposed of according to national regulations.
- Contact your local authority for details of collection schemes in your area.

  In all circumstances:
  - Do not dispose of power tools with domestic waste.
  - Do not incinerate.
  - Do not abandon in the environment.
  - Do not dispose of WEEE* as unsorted municipal waste.

* Waste Electrical & Electronic Equipment.

15. EXPLANATION OF SYMBOLS

15.1 EXPLANATION OF SYMBOLS

WEEE
Do not dispose of Waste Electrical & Electronic Equipment in with domestic rubbish

CONTACTS

- **DRAPER TOOLS LIMITED,**
  Hursley Road, Chandler's Ford,
  Eastleigh, Hampshire. SO53 1YF. U.K.

- **Helpline:** (023) 8049 4344
- **Sales Desk:** (023) 8049 4333
- **Internet:** www.drapertools.com
- **E-mail:** sales@drapertools.com
- **Sales Fax:** (023) 8049 4209
- **General Enquiries:** (023) 8026 6355

- **Service/Warranty Repair Agent**
  For aftersales servicing or warranty repairs, please contact the Draper Tools Helpline for details of an agent in your local area.

YOUR DRAPER STOCKIST

KCKC091214